Basic Vertical Series (continued)

BVD • Low Profile Concealed Floor

The low silhouette, vertical discharge, floor mounted unit is designed for concealed applications inside a closet or furred-in under window installations for applications in public buildings, hotels, schools, hospitals and general commercial applications where the unit height is restricted.

Standard Features Include:

- Performance ARI Certified to Standard 440.
- ETL-Listed. Constructed in compliance with ANSI/UL 1995 Standard.
- All sheet metal components are fabricated of 18GA G90 galvanized steel.
- Cabinet liner in ½-inch dual-density fiberglass.
- High-efficiency 2-row coil suitable for a 2-pipe system.
- Coil manual air vent.
- Easily removal 1-inch thick disposable filter.
- Multi-speed motor of the permanent split capacitor (PSC) type.
- Double Width Double Inlet (DWDI) direct driven blowers of the whisper quite type.
- Three speed Motor switch.
- Controls installed in a single control box suitable for single power supply.
- Single wall condensate pan in galvanized steel, thermally insulated on the outside (Consult Superior Rex for availability).
- Single wall auxiliary condensate pan thermally insulated on the outside.
- ½-Inch top discharge air flange.

Optional Features Include:

- 3- And 4-row coils for 2-pipe systems.
- Single block 2 and 3 rows CW with 1 row re-heat coils for 4-pipe system applications (5 rows max).
- Single block 2 rows CW with 2 rows re-heat for 4-pipe system applications (5 rows max).
- LH or RH pipe connections entry
- Filter option include:
  - 1-inch high-efficiency pleated filters.
  - 1-inch washable filters.
- Cabinet liner in ½-inch foil face.
- Motor voltage suitable for 208V, 230V or 277V/1Ph/60Hz power supplies.
- Motor in-line quick disconnect.
- Thermostat and Accessories (Refer to Accessories section for details.
- Single power supplies disconnect switch and fuses.
- Automatic 2-pipe changeover switch for heating and cooling applications.
- Electric heaters.
- HW standby electric heater auto changeover switch.
- Fresh air opening.
- Fresh air with manual or auto dampers.
- Fresh air freeze protection.
- Valve Packages (Refer to Accessories section for details.
- Condensate pan options:
  - Single wall condensate pan manufactured in 20GA 304 Stainless Steel.
  - Double wall construction consisting of outer and inner skins.
- Single wall auxiliary condensate pan manufactured in 20GA 304 Stainless Steel.
- Auxiliary condensate pan overflow safety switch.
- Remote discharge air grilles:
  - Stamped with access doors
  - Aluminum double deflection
  - Deluxe aluminum double deflection grilles (Contact Superior Rex for availability).
  - Linear bar aluminum grille (Contact Superior Rex for availability).
- Special discharge air grille colors (Contact Superior Rex for color range availability and price).
- Remote stamped return air/access panel with filter access door.

A Participating Corporation in the ARI 440 Certification Program

Dimensions

BVD Low Profile Concealed Floor

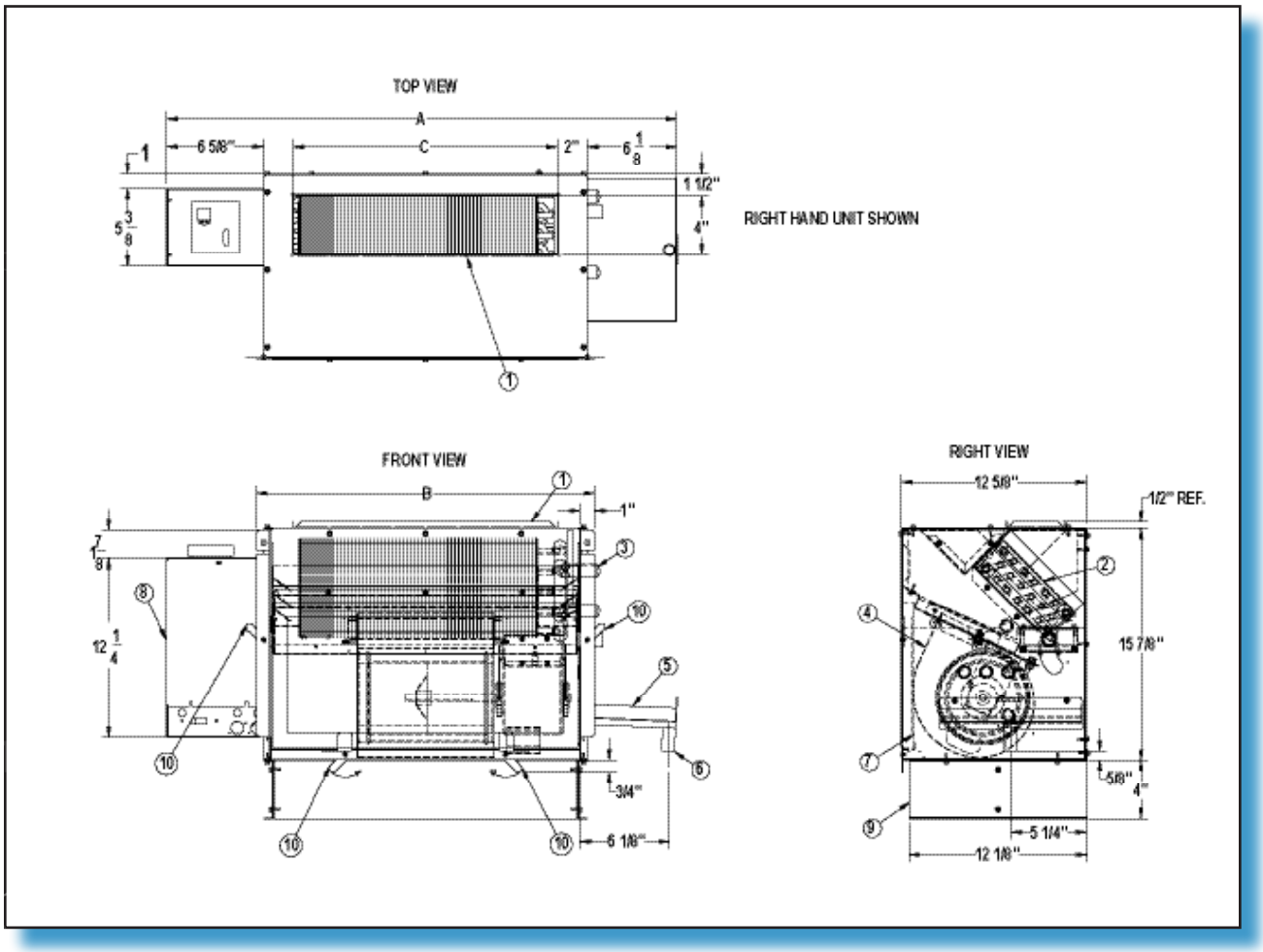

1. Supply Duct Collar
2. Coil
3. Coil Connections (2-Pipe Shown)
4. Motor/Blower(s) Assemby
5. Auxillary Condensate Tray
6. Condensate Connection ⅞" O.D.
7. Filter
8. Control Box
9. Sub-base (optional)
10. Filter Clips

Model	Dimensions (inches)					Approx. Weight (pounds)
	A	B	C	Filter	Opt. Cover	
BVD02	34⅞	23 1/9	18	21x10x1	37⅛ x 15 5/7 x ½	90
BVD03	38⅞	27 1/9	22	25x10x1	41⅛ x 15 5/7 x ½	95
BVD04	49⅞	38 1/9	33	36x10x1	52⅛ x 15 5/7 x ½	100
BVD06	57⅞	46 1/9	44	44x10x1	60⅛ x 15 5/7 x ½	120

All dimensions are in inches.

Performance Data

BVD Low Profile Concealed Floor

2-PIPE SYSTEM							
Model	2 Rows Cooling (1)				2 Rows Heating (1)		
	Total MBH	Sensible MBH	Flow gpm	PD ft wg	Sensible MBH	Flow gpm	PD ft wg
BVD02	4.8	4.1	0.9	0.43	16.5	1.1	0.46
BVD03	7.0	5.9	1.4	1.03	23.4	1.6	1.02
BVD04	11.5	9.0	2.3	3.54	34.6	2.4	2.87
BVD06	14.1	12.0	2.8	1.34	47.4	3.2	1.51

4-PIPE SYSTEM							
Model	2 Rows Cooling				1 Row Heating		
	Total MBH	Sensible MBH	Flow gpm	PD ft wg	Sensible MBH	Flow gpm	PD ft wg
BVD02	4.6	3.9	0.9	0.40	11.1	0.8	0.79
BVD03	6.8	5.6	1.4	0.96	15.4	1.0	1.67
BVD04	11.1	8.5	2.2	3.27	22.3	1.5	4.57
BVD06	13.6	11.4	2.7	1.25	31.0	2.1	10.00

2-PIPE SYSTEM							
Model	3 Rows Cooling				3 Rows Heating		
	Total MBH	Sensible MBH	Flow gpm	PD ft wg	Sensible MBH	Flow gpm	PD ft wg
BVD02	6.7	5.0	1.3	1.24	20.8	1.4	1.08
BVD03	9.8	7.3	2.0	2.91	29.7	2.0	2.42
BVD04	15.3	10.9	3.1	9.05	43.3	3.0	6.61
BVD06	19.7	14.8	3.9	3.35	60.4	4.1	3.12

4-PIPE SYSTEM							
Model	3 Rows Cooling				1 Row Heating		
	Total MBH	Sensible MBH	Flow gpm	PD ft wg	Sensible MBH	Flow gpm	PD ft wg
BVD02	6.4	4.7	1.3	1.13	10.6	0.7	0.74
BVD03	9.3	6.9	1.9	2.64	14.7	1.0	1.56
BVD04	14.5	10.3	2.9	8.23	21.3	1.5	4.25
BVD06	18.8	14.0	3.8	3.05	29.7	2.0	9.38

2-PIPE SYSTEM							
Model	4 Rows Cooling				4 Rows Heating		
	Total MBH	Sensible MBH	Flow gpm	PD ft wg	Sensible MBH	Flow gpm	PD ft wg
BVD02	7.8	5.4	1.6	2.23	22.4	1.5	1.66
BVD03	11.4	8.0	2.3	5.20	32.2	2.2	3.76
BVD04	15.7	11.0	3.1	2.35	45.4	3.1	1.96
BVD06	23.1	16.2	4.6	5.61	65.6	4.5	4.48

1. Standard basic unit.
2. All ratings are based at sea level altitude, nominal air volumes at 0 external static pressure and with water as the cooling fluid.
3. Cooling capacities are based on 80°F DB/67°F WB entering air, 45°F entering water, 10°F water temperature rise and high fan speed.
4. Heating capacities are based on 70°F DB entering air temperature, 180°F entering hot water, 30°F water temperature drop and high fan speed.

Nominal Air Volumes			
Model	cfm (1)		
	High	Med	Low
BVD02	241	171	123
BVD03	353	235	182
BVD04	492	364	268
BVD06	728	567	396

1. Nominal air volume ratings are based on a 2-row coil at sea level altitude with 0 external static pressure.

Model	Motor	
	HP	Total AMPS
BVD02	1/30	0.50
BVD03	1/30	0.50
BVD04	1/20	0.78
BVD06	1/20	0.78

1. Electric ratings are based on units suitable for a power supply of 115V/1Ph/60Hz.

Suggested Specifications

Fan Coils

Basic Vertical Units Standard Configurations

1. Furnish and install Superior Rex models BVR, BVS, BVC and low profile BVL, BVD vertical basic fan coils of sizes and capacities shown on the plans to meet prevailing cooling and heating requirements.
2. Fan coils shall be performance certified to ARI Standard 440. Units shall be wired in compliance with ANSI/UL 1995 Standard and listed with ETL.
3. Fan coils shall be sound tested in accordance with ARI Standard 260 for ducted units and ARI Standard 350 for non-ducted units. Manufacturer shall provide these dB ratings on request for each model specified.
4. Unit casing shall be 18-gauge, zinc coated, phosphate treated, galvanized steel. Painted sheet metal components (BVS, BVC and BVD units only) components shall be 18-gauge galvanealed sheet metal.
5. Painted panels (BVS, BVC and BVD units only) shall be painted with a polyester powder coating, electrostatically applied, oven baked to 400°F for 10 minutes in beige or white tones.
6. High-efficiency, 2-row coil shall be suitable for a 2-pipe system. Coils shall be manufactured with aluminum fins mechanically bonded to seamless copper tubes. The copper tubes shall be ⅜-inch OD with a wall thickness of 0.017-inch which comply with ASTM B-75. The fins shall be waved with ripple hedges for superior efficiency with a thickness of 0.0045-inch and spaced at 10 fpi. All coils shall be leak tested with 100% helium to ensure a leak free coil. All coils shall be shipped with a safety air pressure of 100 - 125 psi to guarantee a leak free arrival at the final destination.
7. Unit pipe entry location shall be in accordance with the project schedule.
8. Coils shall be installed with manual Schrader type air vents with a sealing cap and be located at the highest point of the coil. The cap shall have a dual purpose, to seal any potential water leakage in the eventuality of Schrader valve failure and as a service tool for the extraction/insertion of the internal Schrader valve.
9. Standard filters shall be 1-inch nominal thickness of the disposable type with a one-piece moisture resistant chipboard frame to eliminate corner separations. The spun glass filtering media shall be bonded with a resinous agent providing rigidity and resistance to media compression and meets UL class 2.
10. Cabinets shall be lined with ½-inch dual-density fiberglass with a density of 1.5lbs/ft^3 and 4.0lbs/ft^3 for the face meeting NFPA 90A and 90B (appliances), NFPA 255, UL 181, UL723 and ASTM E84.
11. Motors shall be multi-speed of the permanent split capacitor type (PSC) and be directly coupled to the centrifugal fan blower. Motor shall be suitable for a power supply of 115V/1Ph/60Hz and shall be internally protected with an automatic thermal overload. Motor shaft shall be supported by sleeve bearings of the permanently lubricated type for the full life expectancy of the motor. All motors shall be directly mounted to the fan deck and be isolated from the unit casing by two resilient anti-vibration mounts.
12. Direct-driven fan shall be of the whisper quite type, Double Width Double Inlet (DWDI) forward curved statically and dynamically balanced at the factory. The fan wheel and casing shall be constructed of galvanized steel.
13. Electric components shall be wired to a single control panel for single point power supply. Wiring exposed to the outside of the units shall be installed in conduits to meet UL 1995 safety requirements.
14. Condensate pans shall be single wall 18-gauge G90 galvanized steel-welded at the corners, thermally protected on the outside with fire and smoke rated ¼-inch high-density insulation to prevent condensation. The factory installed ⅞-inch OD sweat copper condensate connection shall be located at the lowest point of the condensate pan to ensure all water drains from the condensate pan (Consult Superior Rex for availability).
15. Auxiliary condensate pan shall be removable, single wall, 18-gauge G90 galvanized steel, thermally protected on the outside with fire and smoke rated ¼-inch high-density insulation to prevent condensation. The factory installed ⅞-inch OD sweat copper condensate field connection shall be located at the lowest point of the auxiliary condensate pan to ensure that all water is drained from the condensate pan.
16. Discharge air flange (BVR and BVD units only) shall be ½-inch to facilitate the field connection of ducts.
17. Discharge air grille (BVS, BVC and BVL) shall be of the stamped louvered type and be an integral part of the cabinet assembly.
18. Access doors shall be provided for access to the electric controls and valve package.

Suggested Specifications (continued)

Fan Coils

Basic Vertical Units Optional Configurations

Cooling and Heating Coil

1. High-efficiency 3-, 4- and 5-row coils suitable for 2-pipe systems (BVR, BVS and BVC 5-row maximum).
2. High-efficiency single block with 2, 3 and 4-rows chilled water (CW) with 1-row re-heat coil suitable for 4-pipe system applications, or
3. High-efficiency single block with 2, 3 rows chilled water (CW) with 2-row re-heat coil suitable for 4-pipe system applications.

Filter

1. Filter shall be 1-inch pleated filter with an average atmospheric dust spot efficiency range of 20 - 30% per ASHRAE Standard 52.1 test method, or
2. Filter shall be 1-inch washable filter consisting of synthetic fibers coated with a special resin, then baked together at a high temperature resulting in a tough and springy, thoroughly bonded, nearly rigid air filtration media. Washable filters shall have a longer service life, better structural integrity as well as being completely odor free.
3. A spare set of filters shall be available for replacement after the commissioning of the unit and prior to the handover of the project.

Motor and Motor Accessories

1. Motors shall be suitable for 115V/1Ph/60Hz or 208V/1Ph/60Hz or 230V/1Ph/60Hz or 277V/1Ph/60Hz power supplies (delete as applicable).
2. A motor in-line quick disconnect shall be installed to facilitate the removal/replacement of motor.

Thermostat and Accessories

Refer to Accessories section for details..

Disconnect Switch and Fuses

Units shall be wired for single power with supply with a disconnect switch and fuse(s) to match the unit full maximum circuit ampacity (MCA) in line with UL 1995.
2-Pipe Heat/Cool Auto

Changeover Switch

A mechanical changeover switch shall be supplied on 2-pipe systems to automatically change over the thermostat operation for summer and winter modes.

Electric Heater and Accessories

1. Electric heaters shall be of the wound type mounted in a metal frame and supported by ceramic rings and terminals. Electric heaters shall be installed on the blower discharge side for better heat dissipation and shall include an automatic reset, high limit cut-out and contactor.
2. 2-pipe standby electric heating heaters shall be installed and pre-wired as standby heating for the eventuality of a failure of the primary hot water (HW) system. A changeover sensor shall be installed in each unit and the changeover between the failed hot water system and the standby electric heater shall be automatic.

Chilled and Hot Water Valve Controls

Refer to Accessories section for details..

Condensate Pan and Accessories

1. Condensate pan shall be single wall manufactured in 20-gauge 304 stainless steel and shall be thermally protected on the outside with fire and smoke rated ¼-inch high-density insulation to prevent condensation. The factory installed ⅞-inch OD sweat copper condensate connection shall be located at the lowest point of the condensate pan to ensure that all water is drained from the condensate pan (Consult Superior Rex for availability), or
2. Condensate pan shall be double wall construction consisting of an outer and inner skin. The outer skin shall be manufactured of 18-gauge G90 galvanized sheet metal wrapped around the inner skin with 1-inch thermal insulation between both skins to prevent condensation. The inner skin of the double wall condensate pan shall be of 18-gague G90 galvanized sheet metal, or
3. Condensate pan shall be double wall construction consisting of an outer and inner skin. The outer skin shall be manufactured of 18-gauge G90 galvanized sheet metal wrapped around the inner skin with 1-inch thermal insulation between both skins to prevent the formation of condensation. The inner skin of the double wall condensate pan shall be of 20-gauge 304 stainless steel galvanized sheet metal.
4. A mastic coating shall be applied to the inside of the condensate pan for a prolonged life.

Auxiliary Condensate Pan and Accessories

1. Auxiliary condensate pan shall be removable, single wall 20-gauge 304 stainless steel, thermally protected on the outside with fire and smoke rated ¼-inch high-density insulation to prevent condensation. The factory installed ⅞-inch OD sweat copper condensate field connection shall be located at the lowest point of the auxiliary condensate pan to ensure that all water is drained from the condensate pan.
2. An automatic safety overflow switch shall be located in the auxiliary condensate pan and be interconnected to the unit electric system preventing the unit operation if an overflow status is detected.

Suggested Specifications (continued)

Fan Coils

Basic Vertical Units Optional Configurations (continued)

Discharge Air Grilles and Accessories

- Unit mounted (BVS and BVC units only) discharge air grille shall be double-deflection, made of aluminum and painted white for white painted cabinet units or aluminum for beige painted cabinets, or
- Unit mounted (BVS and BVC units only) deluxe discharge air grille shall be double-deflection, made of aluminum and painted white for white painted cabinet units or aluminum for beige painted cabinets, or
- Unit mounted (BVS and BVC units only) fixed linear discharge air grille shall be made of aluminum and painted white for white painted cabinet units or aluminum for beige painted cabinets, or
- Remote mounted (BVR and BVD) stamped grille with access doors painted white or beige, or
- Remote mounted (BVR and BVD) grille assembly with access doors painted white or beige and a deluxe aluminum grille core, or Remote mounted (BVR and BVD) grille assembly with access doors painted white or beige and a linear aluminum grille core, or
- Special discharge air grilles colors shall be_____. (Contact Superior Rex for color range availability and price).

Cabinet and Accessories

1. Special cabinet color shall be_____. Contact Superior Rex for color range availability and price.
2. Access panel (BVS, BVC and BVR units) shall be manufactured in heavy duty 16GA steel.
3. Remote access/return grille panel (BVR and BVD) shall be stamped with a hinged door for easy access to the filters and painted white or beige.
4. Access panel security fasteners (BVS, BVC and BVR units) shall be tamperproof, requiring a specialist tool to access the units, or
5. Access panel security fasteners (BVS, BVC and BVR units) shall be of the quarter turn type, to facilitate the removal of the access panel.
6. Four adjustable leveling feet shall be installed to ensure that the unit is correctly level and prevent condensate water leaks.
7. Access doors shall be fitted with keyed locks.